MAXIM ASSEMBLY INSTRUCTIONS FOR 2652

1, Screw the Center Tube to the Nipple on the Housing. Slide the Arm onto the Center Tube, Put the Flat Washer, Key Washer Ground Wire Key Washer on to Nipple on the Center Tube then secure with the Hex Nut.

2, Adjust and turn the Arm evenly.

INSTALL THE BULBS (BULBS NOT INCLUDING)
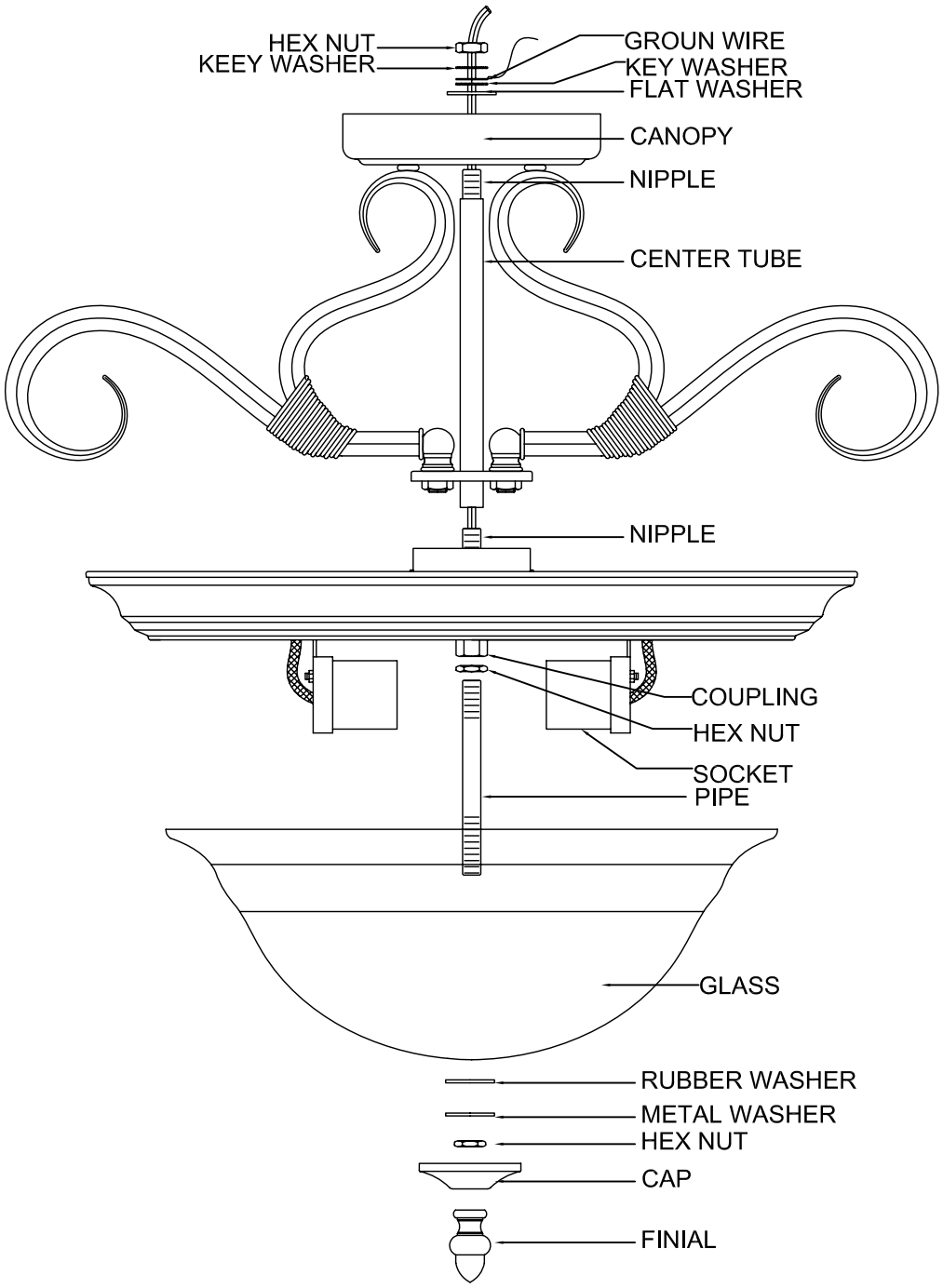
3, Put the GLASS against the Glass Pan , then attach the Rubber washer,Metal washer and Hex Nut to the Pipe, Attach the Cap onto the Glass and secure with the Finial.